NEURAL MAGNETIC STIMULATION: RESEARCH CONCERNING THE IMPROVEMENT OF THE ELECTRICAL EQUIPMENT PERFORMANCES AND CLINICAL EFICIENCY IN DIAGNOSTIC AND TREATMENT

Project manager: Prof. dr. ing. Radu CIUPA

Importance and relevance of the scientific content

The presentation presents the references of the research; it will prove the level of documentation of the project supervisor.

The spectacular and constant development of medicine has led to important discoveries, which lead to increased life expectancy and better life standards. This would not be possible without the broadening of traditional "frontiers" of this science by significant contribution of engineering, mathematics, information technology etc.

One of the new interdisciplinary research directions is the ***functional stimulation***. Its foundation lies on the observation that the neuron's response to an external stimulation has an electric nature. This leads to the idea of artificial stimulation (magnetically or electrically) of nervous tissue. Research in this direction has started in the recent years [Hodgkin, Huxley - 1952], [McNeal - 1976], [Barker – 1985] and it's foundation lies on the electric equivalent models of the nervous fiber, models witch take into account the neuron properties and the real behavior (observed experimentally) of neurons for generation and propagation of nervous impulses.

Magnetic stimulation generates an action potential in the excitable cells through an electric current that drives the charged ions to pass thru the cell's membrane. The physical phenomenon of magnetic stimulation has recently entered the neurology field. The magnetic stimulation is based on induction of an electric current in the nervous tissue by placing a coil driven by time varying current over the fiber that needs to be stimulated. The principle is presented in figure 1:

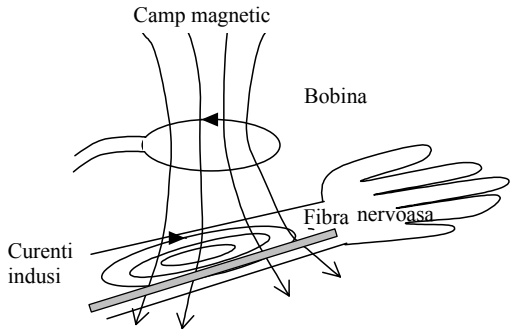

Figure 1: Application of Faraday's law for magnetic stimulation of nervous fibers.

The main advantage of magnetic stimulation over classic stimulation (electric stimulation) is the possibility of painless stimulation, because there is no current traversing the skin, making this

method noninvasive. Also, magnetic field can traverse layers with hi resistivity, like the skull, allowing this way to stimulation at cortical level and also the stimulation of peripheral nerves that are placed deep beneath the skin.

In the latest years, the interest for magnetic stimulation has grown considerably because the method has proven utility and applicability both in diagnostic and treatment. Worldwide this method is clinically applied (or is in advanced stages of testing) in cases as:

- Early diagnosis of neurologic degenerative diseases (Parkinson, sclerosis);
- Creation of a functional map of the brain, by stimulation of different parts of the cortex and registration of the responses. In present days TMS (Transcranian Magnetic Stimulation) proves useful in the study of neurological and psychic diseases. TMS is important because it can prove causality in neurosciences and represents a powerful cartographic instrument for the functions of the brain. It can be used for the study of the organization of the brain in terms of centers used for different functions like language, memory, attention, etc. TMS does not have the disadvantages of functional magnetic resonance which allow identification of different regions during an activity, but does not prove that the region is used for that specific task. TMS can suppress activity in associated regions, leading to reduced performances in fulfilling certain tasks, which is a strong proof for the implication of certain zones in solving certain tasks. Especially interesting for TMS would be to use it on healthy subjects to confirm / infirm the supposition according to witch technique would increase certain mental abilities and even creativity;
- Evaluation of nerve pathway integrity. In figure 2 we present the experiment created in this direction by 2 of our research members at the Medicine University of Vienna. Figure 2-a) explains the principle or the experiment: a stimulation coil is placed over the head for TMS. The nervous impulse generated in that area is propagated through nervous pathways to the hands and feed, commanding muscular contractions. The muscular response was recorded through electromyography. In figure 2-b) we observe the positioning of measurement electrodes on the patients body. The muscular response registered on the left muscle *tibialis anterior* is presented in figure 2-c) and 2-d). The investigated patient had a spinal cord lesion, witch made the muscular response from the TMS to be null - figure 2-c). On the other hand, after lumbar magnetic stimulation (stimulation coil placed in that area), the muscular response is present – figure 2-d). In this way we can identify the area where the nervous pathways have lesions. Also, the conduction speed can be determined in the same way, speed witch can be an important indicator of the health of the patient;

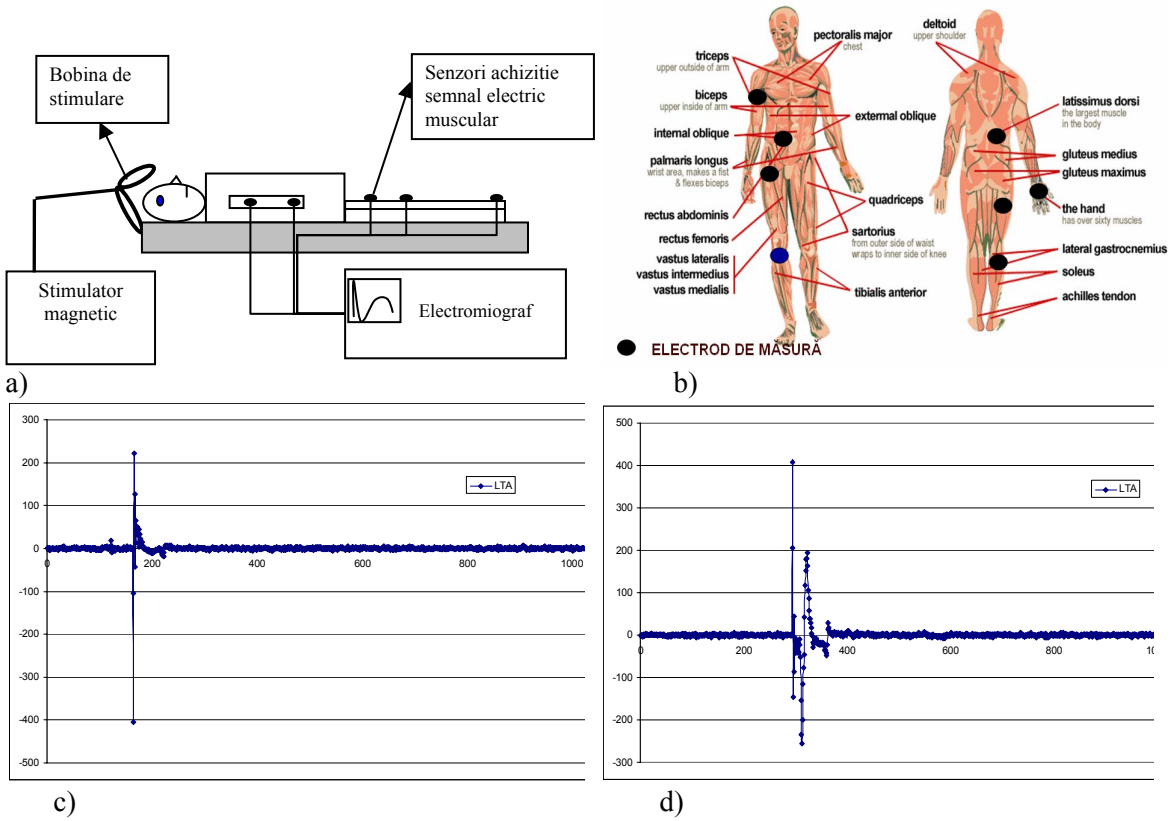

Figure 2: Experiment created for evaluation of the neural pathway integrity of patients

- Treatment of psychiatric conditions (major depression, bipolar affective disorder, schizophrenia, obsessive-compulsive disorder, post-traumatic stress disorder) and neurologic conditions (Parkinson, insomnia, stimulation of cortical areas to help recovery of different functions for patients with stroke accidents, migraines, drug resistant epilepsy, stimulation of chest nerves and cervical nerves to increase the inhaled air for patients with cervical tetraplegy; treatment of incontinence, etc.)

Being a new medical "instrument", scientific research in this field continues to bring substantial improvements, especially through the control of stimulation parameters (amplitude and duration) and through the precision of the localization of the stimulation. Although this technique hasn't entered the Romanian health care system, Romanian researchers, that are part of this research project, have studied and proposed solutions regarding the design and the dimensions of the stimulation coils, in order to improve focus and energetic transfer from the stimulator to the target tissue.

Figure 3 illustrates the simplest configuration of a magnetic stimulation circuit: the stimulation coil is placed parallel to the tissue, approximated to a conductive semi space, considered homogenous, and the nervous fiber is embedded in this medium. Also, there is depicted the cable

model for the nervous fiber, in witch the cellular membrane properties are modeled like an electric circuitry with distributed parameters.

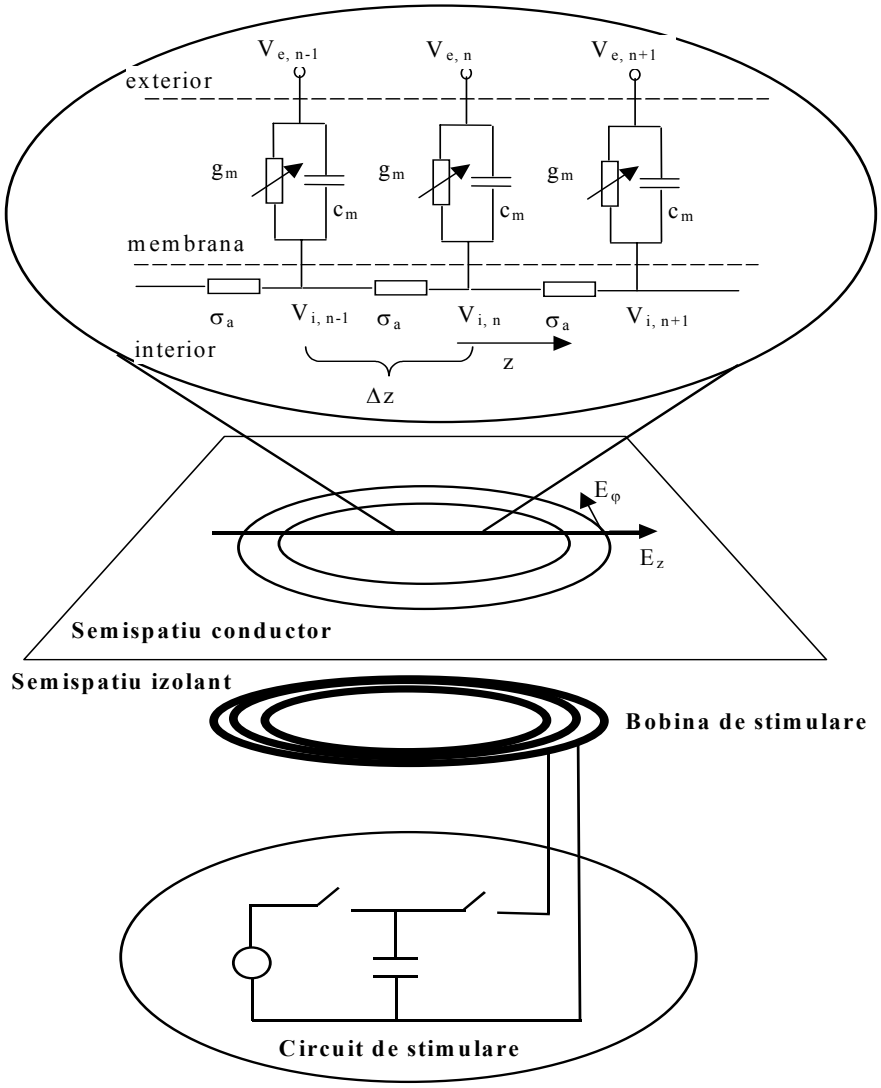

Figure 3: The stimulation circuit [Nagarajan S., 2000]

Modeling of magnetic stimulation of nerve fibers can be achieved in a combination of 3 steps:

1. Calculation of the space distribution of induced electric field by time depending variable magnetic field produced by the coil. The distribution of the electric field depends on the geometry of the coil and its determination can be done through electromagnetic field analysis [Esselle, 1992], [Morega, 1996, 2000].
2. Calculation of distribution in time of the stimulation field by analyzing the transitory regime of the source circuit. The coil is driven by the excitation circuit, witch also contains: the capacitor – element for accumulation of energy from the electric source – and the switches

witch control the charging and discharging of the capacitor. The time varying magnetic field – caused by the current that runs through the coil during the discharge of the capacitor – produces electric field in the conductive medium placed in the vicinity of the coil.

3. Modeling the neural substance using compartment structuring and by representing the membrane properties through equivalent electric scheme. Depending on the type of fiber (myelinized or non myelinized), the model and the cable equations change accordingly.

The biological medium modeled, relative to the medical application, can have different idealized forms: semi space conductor for the chest or back, cylinder – for the limbs, sphere – in the case of the head. Depending on the complexity of the model, determination of the induced electromagnetic field in the tissue is done analytically or numerically.

The temporal part of the electric field can be separated from the spatial one. This derives from the premise that the tissue is purely resistive, a correct approximation at the working frequencies. The temporal characteristic of the induced field is described by the rate of change of the current in the stimulation circuit, thus depending on its parameters (the circuit can be modeled as an RLC series circuit – see fig. 3). The effect of spatial and temporal distribution of the induced field can be determined by combining those field calculations with the models of the neuronal structures, incorporating the calculated field into the "cable equation", equation's solution being the transmembranar potential along the nervous fiber.

Concerning the modeling of the nervous fiber, it is done by using a compartment structure. This modeling depends also on the aspects of the neuronal structure: myelinized or not. In figure 3 is described the model for the non myelinized fiber model. In addition to this model, the myelinized model contains the representation of the Ranvier nodes and of the intermodal zone included in the myelin casing (considered as a perfect isolator layer [McNeal 1976], or, in other articles as an isolator with losses [Frijsn, 1994]).

The main research directions start from certain minuses of techniques, observed experimentally. We remind the following: week focalization of the induced field, hi costs of the stimulator – because of very hi currents on the order of kA (impulses), significant energy losses because of heating of the coil and low efficiency in energetic transfer between coil and tissue. Current research directions in the world are thus mainly focused on:

- Optimal design of the stimulation coil in order to achieve desiderate of selective activation of nerve fibers;
- Modeling the stimulation circuit and increasing the efficiency of the stimulation coils for better energy transfer from them to the stimulated tissue (from design);
- A more realistic modeling of the biological medium (non linear and inhomogeneous) with the

aim to obtain correct analytical and numerical solutions, witch produce results as close as possible to the ones determined experimentally.

Far from being over, research in functional stimulation field is heading towards significant results, linked to:

- Regaining the use of limbs from persons that have suffered accidents;
- Amelioration of psychiatric disorders (panic, posttraumatic disorders, depression, different phobias, schizophrenia) [Mantovani, 2004], [Gershon, 2003].
- Efficiency of TMS in forms of major drug and / or electroconvulsive resistant depressions, schizophrenia (especially on perception disturbances by auditive hallucinations) and in obsessive–compulsive conditions it contributes to increasing the quality of life of these patients, professional and familial reintegration. Because this method is non-invasive, in some cases it can be applied on longer periods of time with intermittence, and it has no significant side effects, contributing to the increased compliance to the treatment, essential to those with psychiatric conditions.
- Hi precision applications, witch impose selective activation of some nerve fibers from a nerve fasciculus (urology).

In what concerns the practical applicability of the method described above, appears evident the fact that the main beneficiary are the medical institutions and the patients they are treating. If the method will prove its efficiency even in cases that are not treatable at this time, it will represent a big step in modern medicine.

Selective bibliography:

1. Esselle K.P., Stuchly M.A. - "Neural Stimulation with Magnetic Fields: Analysis of Induced Electric Fields", *IEEE Trans. Biomed. Eng*., vol. 39, No. 7, p. 693 - 700, 1992
2. Morega Mihaela, Morega Al. M. – "Procedeu tehnic şi model matematic pentru stimularea pe cale magnetică a sistemului nervos", *Rev. EEA Electrotehnica*, vol. 44, nr. 9-10, p. 14-20, 1996
3. Morega Mihaela – "Design of coils for magnetic neural stimulation. Efficiency criteria and technical solutions", *ACTA Electrotehnica*, vol. 41, nr. 1, p. 133-138, 2000
4. Mantovani A., Lisanby Sarah – "Applications of Transcranial Magnetic Stimulation to Therapy in Psychiatry", *Psychiatric Times*, Vol. XXI, Issue 9*,* 2004
5. Gershon A.A., Dannon P.N., Grunhaus L. – "Transcranial magnetic stimulation in the treatment of depression", *Am. J. Psychiatry* , vol. 160, nr. 5, p. 835-845, 2003
6. **Laura CRET, Radu CIUPA,** Dan D. MICU, „Mathematical models for magnetic nerve stimulation"*,* ANCME Gent, Belgia, 2003, pg. 156-163, ISBN 973-686-460-X;
7. **Laura CRET, Mihaela PLESA, Radu CIUPA**, Dan D. MICU, „Remarks on the optimal design of coils for magnetic stimulation, ISEM-Bad Gastein, Austria, 12-14 Sept. 2005, pp. 352-354, ISBN 3-902105-00-1

The main objective of this research project is the implementation, in our country, of a new diagnosis and treatment technique: the magnetic stimulation of neural tissue, and creating the first specialized laboratory in this field.

In Romania, this technique was never implemented or applied until now. **On a global scale**, the scientific papers mention different clinical studies applying this method to: the detection of a neural disease, determination of neural track integrity, treatment (insomnia, amelioration of the respiratory function, stimulation of a cortical area for recovering patients with different dysfunctions after vascular accidents, etc).

It has to be mentioned that the majority of these techniques are still in the experimental status, even in other countries still working to solve different technical aspects that our project is also trying to solve. Hereby, **the research objectives** can be synthesized as follows:

- Computation of the spatial distribution of the electric field induced by the magnetic stimulation. It tries to model, as accurately as possible, the biological media, for different shapes of the target tissue (half-space conductor – thorax modeling; cylinder – limbs; sphere – head model; going up to the realistic representation – for example reconstructing the head from CT scan images). The model can include non-homogeneities of the human body.
- Modeling the selective activation of the cortical zone and the peripheral nerve fiber.on magnetic scale, the selective activation is made either,as Grandori [4] – by optimal displacement of one or more coils – especially for cortical stimulation, or as other authors [10],[11] by optimal design of the stimulation coil and study of coil geometry influence over the excited area. This way, the design of different coils geometries is tried in this project, in order to permit a better focalization of the induced electric field, through the control of amplitude and stimulus localization. Of course, the optimal design of the coil is a very difficult problem which involves solving the electromagnetic inverse problem and the use of shape optimization algorithms (e.g.: genetic type).
- Comparative analysis of different types of stimulators, by: inductivity calculation, dimensioning of the impulse generator in order to obtain the best repeating rate of the stimulus, determination of the circuit's electric energy consumption and the dissipated magnetic energy in the coil and control of the coil heating. Three members of the research team are familiar with the subject, having an important research experience in the domain, their results can be verified by analising the list of the articles presented and published at prestigious scientific manifestations in the bio-engineering field.
- Actualization of the cable model by taking into consideration the modification of cell's membrane properties along the neural fiber and its geometrical irregularities. Further mode, for the nerve fiber with myelin sheet, the myelin sheet shall be modelled as an insulator with losses,studying an extra two layer model for it.

When the cable model was proposed [Hodkin, Huxley - 1952], [McNeal - 1976], they took into consideration several simplifications hypothesis, in order to permit the passing from a three - dimensional model to this one - dimensional model. The reevaluation of those hypotheses, in the light of the last experimental determinations, is the base premises for improuving this model.

First, the natural ondulation of nervous fibers - although known for over 200 years, is in general neglected. Few bibliographical articles consider this ondulation as " a sinusoid of variable frequence and amplitude", with wave length between 0,1 - 0,4 mm [Haninec,1986], or a sinusoid wave, with the ondulation wave length between 0,1 - 0,3 mm and amplitude between 0,02 – 0,05 mm [Zachary,1993]. The most recent bibliographic reference in this field [1], referes to the modeling of the nervous structure starting from a perfectly straight fiber and reaching - step by step - to a sinusoidal form with amplitudes up to 0,2 mm and wave length between 0,2 – 5 mm. This ondulation is modeled in plane, suggesting a further study for modelling the nervous fiber as a three dimensional spiral.

Another novelty in the study of neuronal structures started at the experimental establishment of

the appeareance of the action potential into the nervous cell even then when it is stimulated with pure transversal electric field (figure 4).

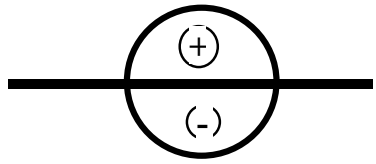

Figure 4: Electrod or stimulation coil emplacement which leads to formation of a pure transversal electric field]

The activation function used until this moment in the cable model predicts that the nervous fiber could not be activated in this position. In the light of the new findings, it is imposed the use of a modified function proposed initially by Ruohonen [1996]:

$$f_m(z) = -\lambda^2 \frac{\partial E_z}{\partial z} + 2aE_\perp$$

The additional term $2aE_\perp$ represents the maximum transmembranar potential – in permanent regim – of a nervous cylindrical cell of radius a, due to stimulation with a constant electric field perpendicular to the cylinder axe.

Adding this two modifications into the cable model give us the decrease of the activation threshold of the nervous cell up to five times over the classical model [2].

Another two hypotheses which are imposed to be considered, regarding to the modeling of the nervous fiber as infinite long and with uniform membrane properties all over the fiber.

The first hypotesis can be considered correct in the case of peripherical nerves, because the length of these nerves is at least five times greater than the distance between the stimulation coil and the fiber. The problem occurs when the cortical stimulation is studied. Nagarajan in [7] states that it is absolute necessary to use two supplementary diferential equations in order to describe the transmembranar potential at the ends of the cable.

As far as the onsideration of the membrane properties as being constante along the fiber, [Struijk,2000] reaches the conclusion that the excitation threshold to the models that include the alteration of the membrane parameters differs up to 20 % from the standard model (for the variation of a single parameter).

With respect to the myelined fiber, adding to the reminded changes, the last publications in this field [5], [6], specifies the fact that it is not enough the consideration of the myelin as a perfect insulator (asuumption that was at the base of the construction of the model and cable equation for this type of structure). The myelin sheet is imposed to be modeled as an lossy insulator, see figure 5:

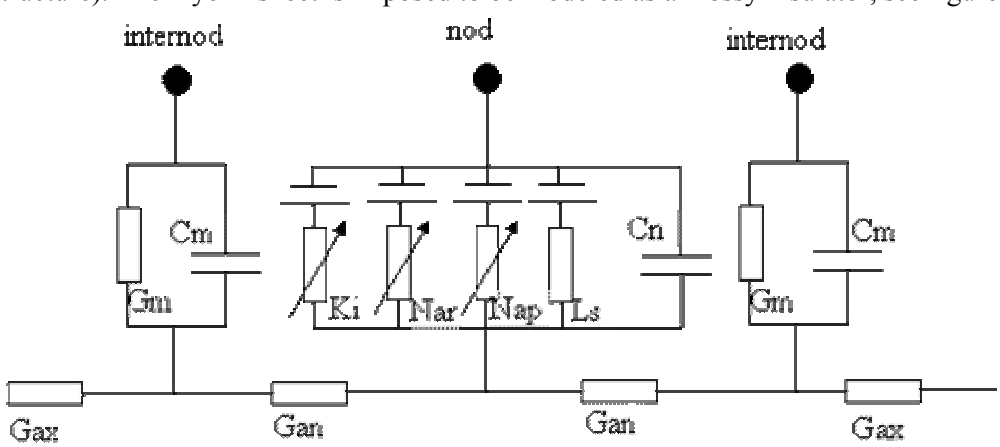

Figure 5: Equivalent electric circuit of the myelined nervous fiber [6]

The Ranvier node containes 3 nonlinear conductances representing: the slow chanel of K^+ (Ki) ions, the rapid chanel and the persistent chanel of Na^+ (Nar) and (Nap) ions, the linear escape conductance (Ln) and the membranar capacity in the node zone (Cn). The internodal zone containes the model of the myelin sheet, considered to be a lossy insulator, as well as the axoplasmatic conductances.

Further mode the author suggests as a future project the modeling of the double layer myelin which shall allow the modeling of the periaxonal conductances.

- Accomplishing the design and execution of an work bench, which will allow the evaluation of the induced electric field into the biological environement, of different designed types of coils. The obtained data through simulation can be compared with experimental determinations (the biological environement can be substituted, in case of measurements, by a saline solution that has the same permittivity and conductance)
- Introducing the magnetic stimulation technique into Medical Centers from Cluj – Napoca and results dissemination in medical environement.
- From medical point of view, psychiatrists from Clinics in Cluj expressed their interess in the therapeutic results quantification for neurological and psychical diseases, reminded through clinical studies and psychometric evaluations, which will bring new results regarding the action mode and efficiency SMT as method of treatment. Repetitive SMT will be compared with SMT regarding the effect over the excitability of the cortico-spinal ways and cortico-cortical that is in function of the stimulation intensity, field orientation and stimulation frequency.

Through the objectives exposed, the research project reaches the series of conjugate efforts of medicine and engineering for improuving the health state of the population (early trace of some affection, through the recovery, faster improvement after accidents or degenerative processes, as well as the treatment of affections due pacient's age). The projects responds to a **major desiderate**, fixed as an **absolute priority by the European Commision**. The potential beneficiary of the results obtained are also the psychiatrists from clinics and ambulatory psychiatry services and day centers (an important and special aspect of SMT being that it can be done without submmiting the pacient, he doesn't have to interrupt he's social activity) as well as neurological physicians witch whom we want to active collaborate.

The approach of the proposed theme implies very strong interdisciplinary activities. There are needed knowledge from electromagnetic field theory, programming (soft elaboration), medicine (anatomic knoledge), numeric methods, engineering.

Relevant bilbiographycal (selective) list of the consulted papers:

1. Schnabel V., Struijk J., *Magnetic and Electrical Stimulation of Undulating Nerve Fibres: A Simulation Study*, Medical & Biological Engineering & Computing, vol. 37, nr. 6, 1999;
2. Schnabel V., Struijk J., *Calculation of Electric Fields in a Multiple Cylindrical Volume Conductor Induced by Magnetic Coils*, IEEE Transactions on Biomedical Engineering, vol. 48, nr. 1, jan. 2001;
3. Nyenhuis J. *Et al., Energy Considerations in the Magnetic (Eddy-Current) Stimulation of Tissues*, IEEE Transactions on Magnetics, vol. 27, nr. 1, jan. 1991;
4. Grandori F., Ravazzani P., *Magnetic Stimulation of the Motor Cortex – Theoretical considerations*, IEEE Transactions on Biomedical Engineering, vol. 38, nr. 2, febr. 1991;
5. Frijns J., Kate J., *A Model of Myelinated NerveFibres for Electrical Prosthesis Design*, Medical & Biological Engineering & Computing, vol. 32, nr. 4, 1994
6. Richardson A, *et al., Modelling the Effects of Electric Fields on Nerve Fibres: Influence of the Myelin Sheath*, Medical & Biological Engineering & Computing, vol. 38, nr. 4, 2000;
7. Nagarajan S. *et al., Effects of Induced Electric Fields on Finite Neuronal Structures: A stimulation Study*, National Science Foundation grant #BCS91-11503, 2000;

8. Durand D. *et al., Effect of Surface Boundary on Neuronal Magnetic Stimulation*, IEEE Transactions on Biomedical Engineering, vol. 39, nr. 1, jan. 1992;
9. Rijkhoff N. *Et al., Modelling Selective Activation of Small Myelinated Nerve Fibres Using a Monopolar Point Electrode*, Medical & Biological Engineering & Computing, vol. 33, nr. 6, 1995;
10. Roth B., *et al., Algorithm for the Design of Magnetic Stimulation Coils*, Medical & Biological Engineering & Computing, vol. 32, nr. 2, 1994;
11. Mouchwar G., *et al., Influence of Coil Geometry on Localization of the Induced Electric Field in Magnetic (Eddy-Current) Stimulation of the Excitable Tissue*, IEEE Transactions on Magnetics, vol. 26, nr. 5, sept. 1990;
12. Morega, Mihaela, *Bioelectromagnetism*, Bucureşti, MATRIX ROM, 1999;
13. Malmivuo, J., Plonsey, R., *Bioelectromagnetism*, CRC Oxford University Press, 1995;
14. Polk, C., Postow Elliot, *Handbook of Biological Effects of Electromagnetic Fields*, CRC Press, New York, 1996;
15. Ciupa R., *Inginerie medicala*. *Notiuni introductive*, Casa Cartii de Stiinta, Cluj-Napoca, 2000;
16. Laura CRET, R. CIUPA, Dan D. MICU, *Mathematical models for magnetic nerve stimulation,* ANCME Gent, Belgium, May 2003